Data Sheet

Article number: 29560600905250
Description: Shaft mounted gear
A603S-9-P132B5

Measures

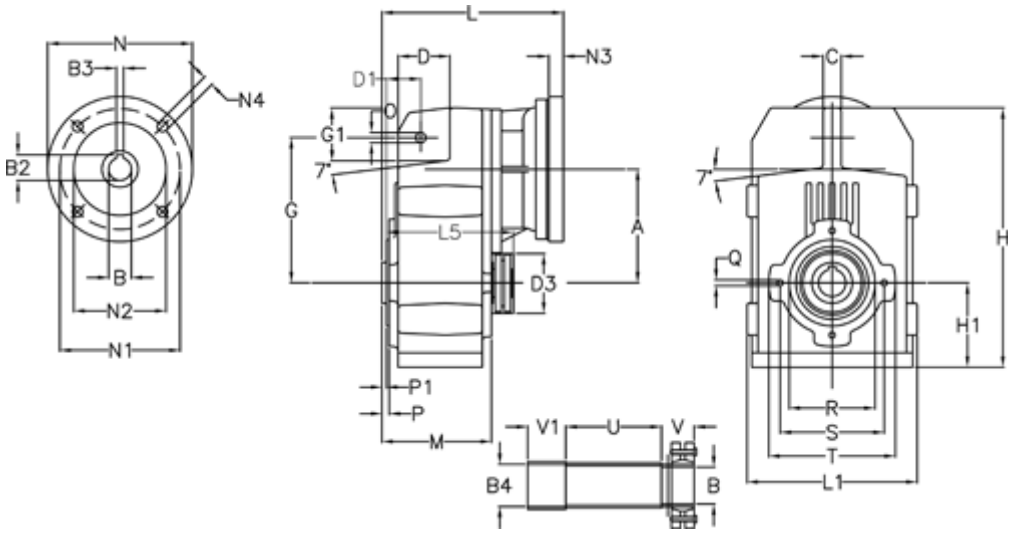

A = 267.00	D1 = 81.0	l5 = 273.0	P1 = 4.0	V1 = 55
B = 65	d3 = 165	M = 204.0	Q = M12x19	
B1 = 38	G = 325	N = 300	R = 180	
B2 = 41.3	G1 = 127.0	N1 = 265	S = 215	
B3 = 10	H = 534.0	N2 = 230	T = 250	
B4 = 57	H1 = 142.0	N4 = 14	Tightening torque N m = 35.0	
C = 26	L = 367.5	O = 22	U = 133.0	
D = 115.0	L1 = 298	P = 10.0	V = 62	

Product drawings and brochures of any kind may contain errors for which Brd. Klee A/S cannot be liable.